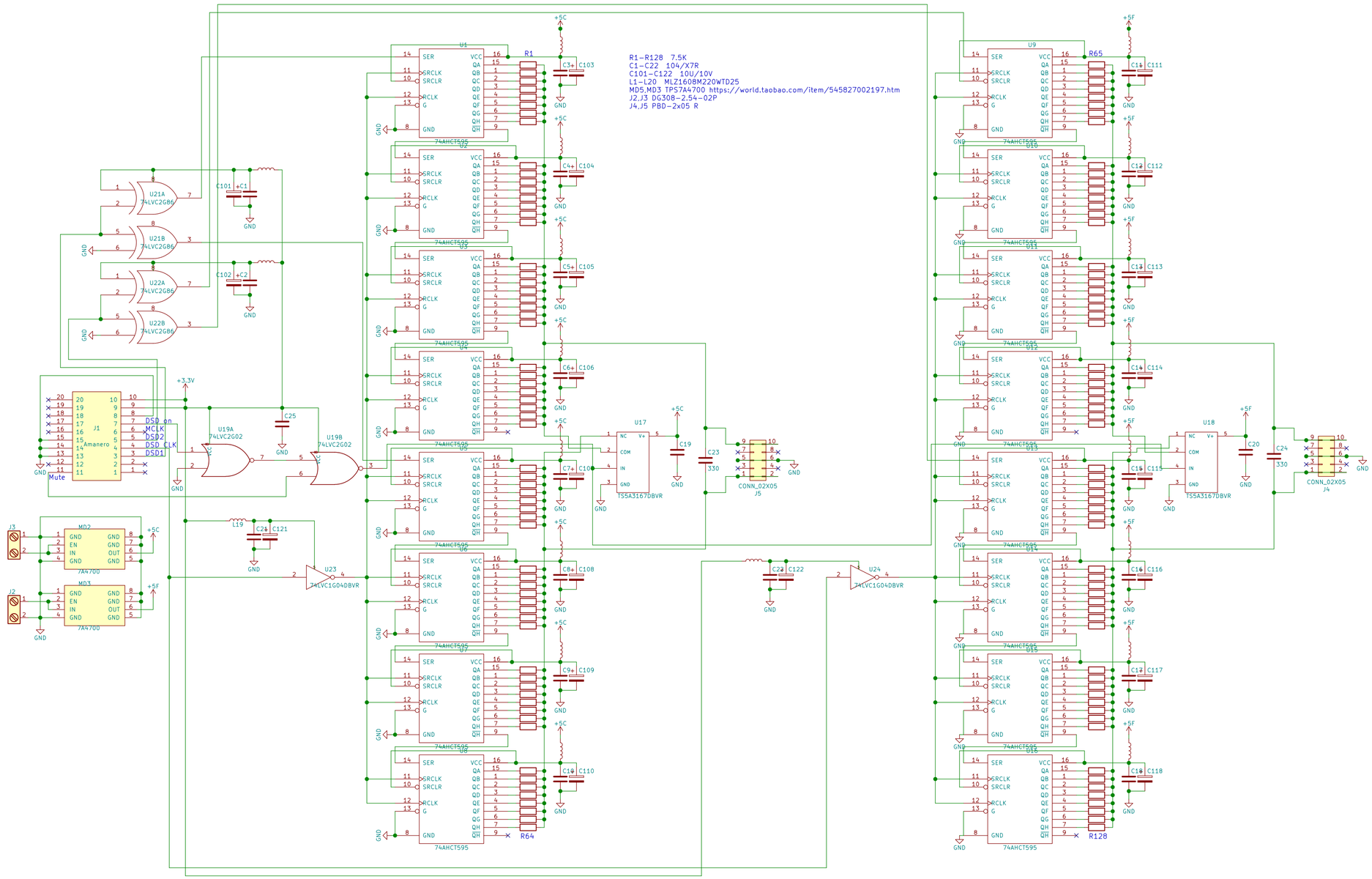

ppy

Sheet: /
File: DSC2.sch

Title: DSC1

Size: A2	Date: 2017-01-09	Rev:
KiCad E.D.A. kicad (2017-08-21 revision 55c7d9816)-makepkg		Id: 1/1